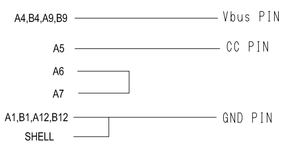

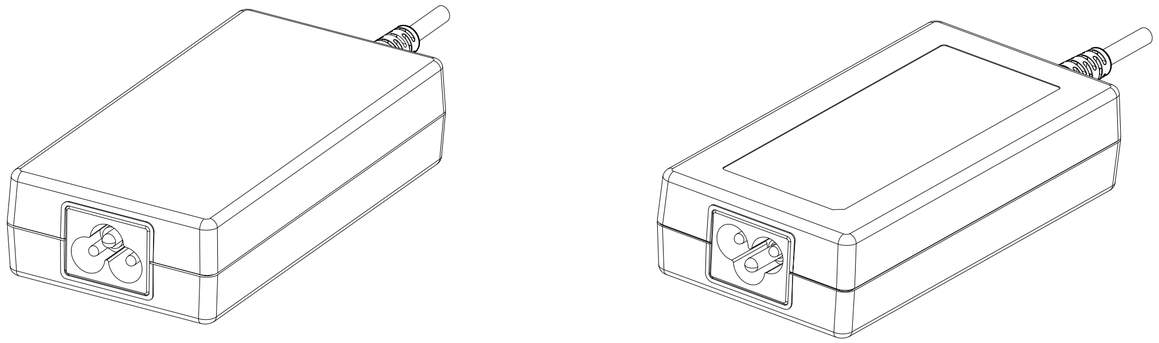

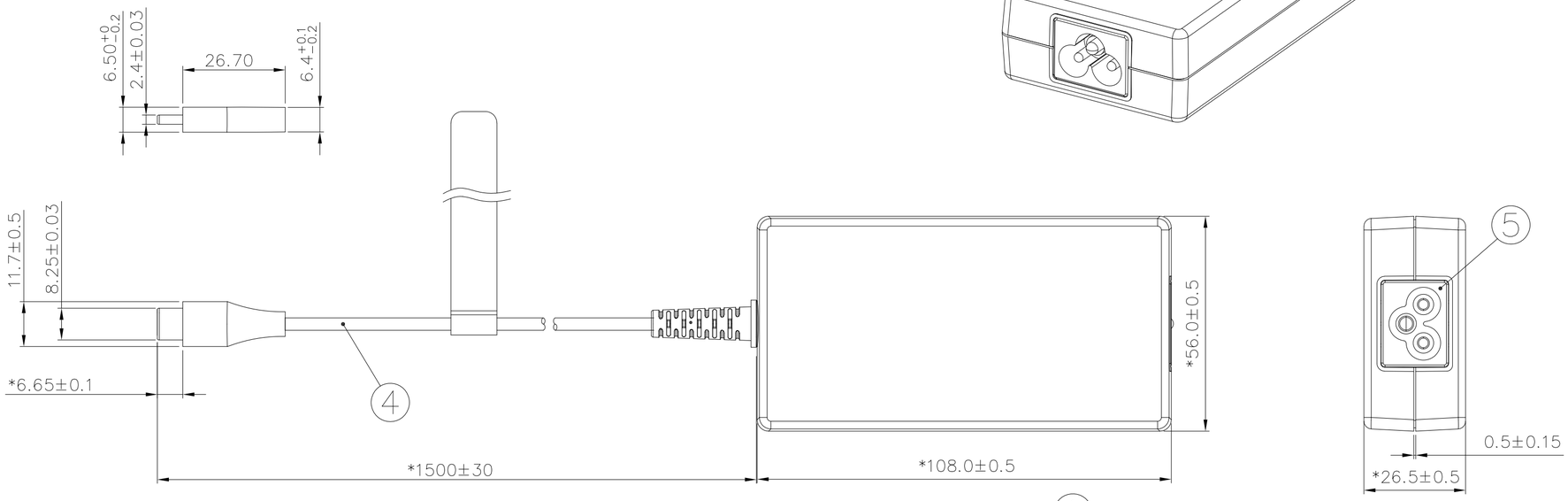

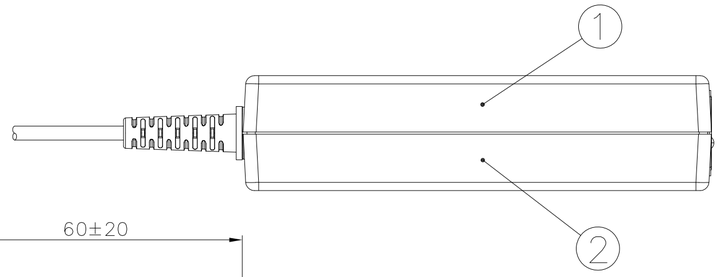

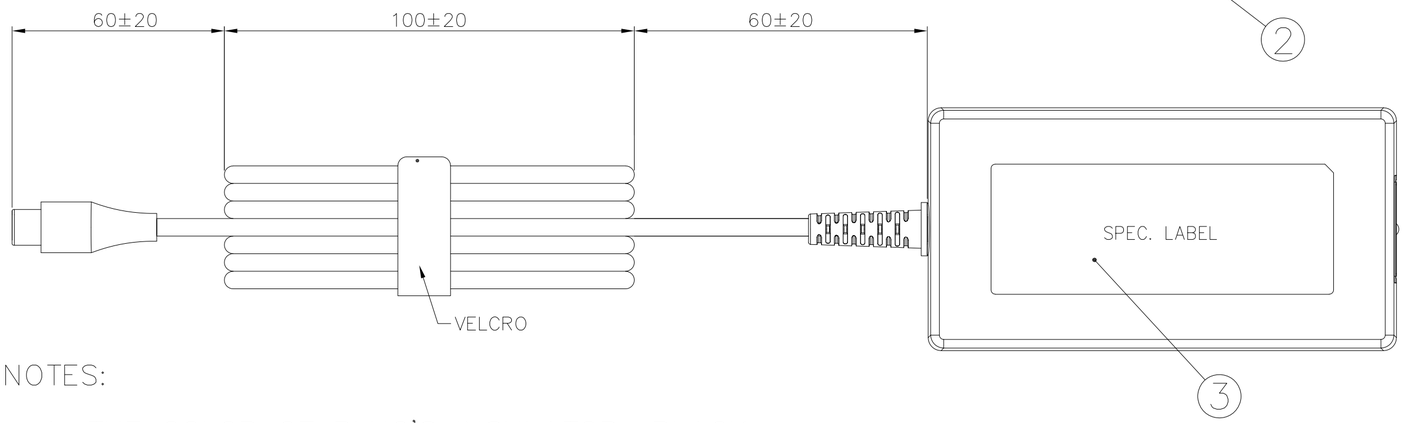

ITEM	PART NAME	COLOR
①	COVER	BLACK
②	CHASSIS	BLACK
③	LABEL	BLACK
④	DC CABLE	BLACK
⑤	SOCKET	BLACK

NOTES:

1. THE COLOR OF PLUG'S INSULATOR: BLACK.
2. PLUG'S SHAPE: USB TYPE C.
3. PLUG'S POLARITY: SEE Diagram Description (A1).
4. MARKED * MARK MUST BE INSPECTED AND CONTROLLED STRICTLY BY QA.
5. AC SOCKET TYPE: C6 TYPE.

台達電子工業股份有限公司
DELTA ELECTRONICS, INC.

Drawn: SHAWN.LI 07/07/23

Design: SHAWN.LI 07/07/23

THESE DRAWINGS AND SPECIFICATIONS ARE THE PROPERTY OF DELTA ELECTRONICS, INC. AND SHALL NOT BE REPRODUCED OR USED AS THE BASIS FOR THE MANUFACTURE OR SELL OF APPARATUSES OR DEVICES WITHOUT PERMISSION.

THIRD ANGLE PROJECTION

Description: PHYSICAL DIMENSION

DIMENSIONAL TOLERANCES HOLES : ±0.05 ANGLES : ±0.5°

( )		(V)		( )		( )	
<30	: ±0.25	DECIMALS		UP~100	: ±0.2	250~300	: ±0.4	UP~600	: ±1.5
>30~100	: ±0.35	X	: ±0.3	100~150	: ±0.25	300~350	: ±0.45	600~900	: ±2.4
>100~300	: ±0.5	X.X	: ±0.2	150~200	: ±0.3	350~400	: ±0.5	900~OVER	: ±3.1
ABOVE 300	: ±0.6	X.XX	: ±0.1	200~250	: ±0.35				

A2 SIZE

Part No. ADP-100XB BD

REV. 00

SCALE -- | UNIT mm | USED ON ADP-100XB BD

SHEET 2 OF 2 | ISSUE DATE:07/07/23

FRAME NAME: DF-MEA2H-1R01.DWG